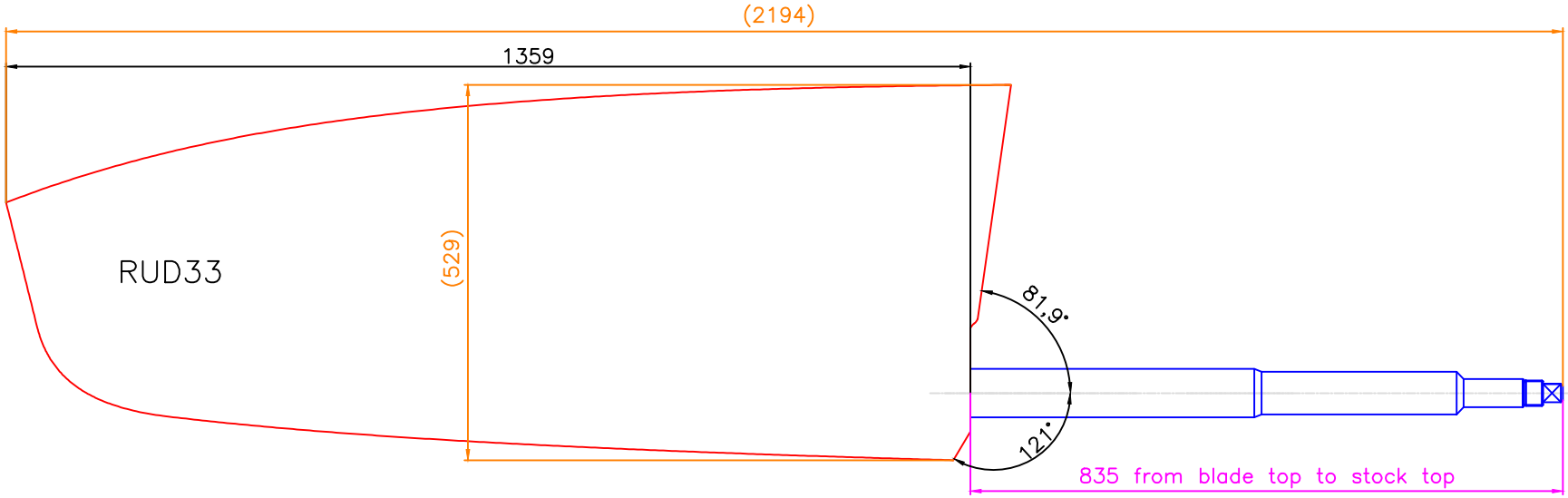

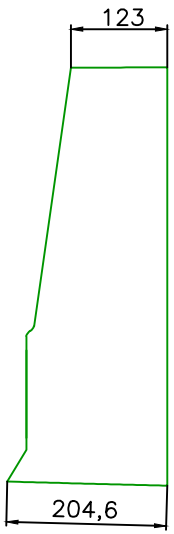

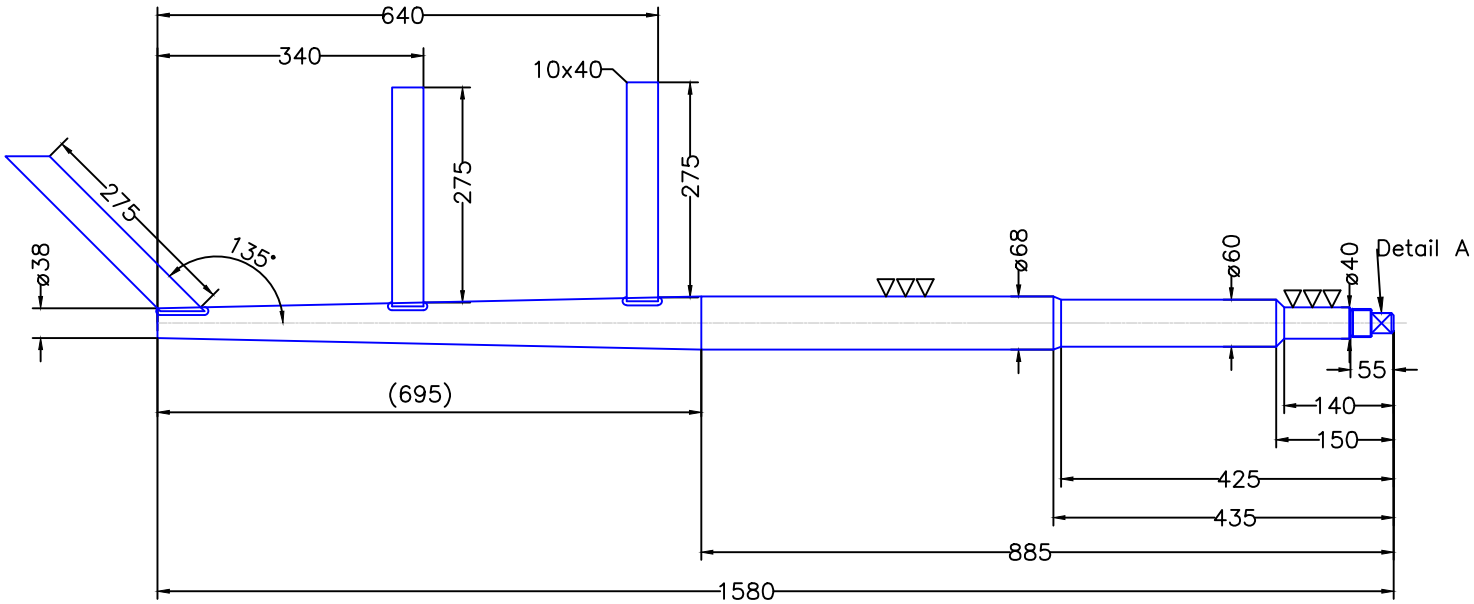

Detail A

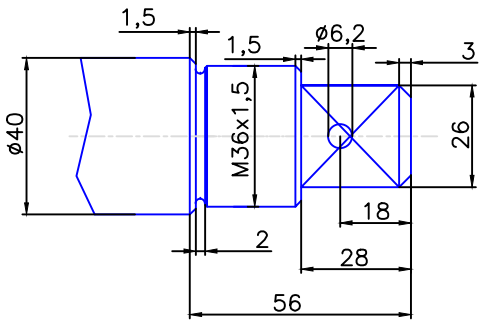

RUD33

REVISIONS			
Rev.	Description	Date	Author

Project: Bavaria 36 V36

Jefa Rudder SYSTEMS

JEFA MARINE A/S
NIMBUSVEJ 2
2670 GREVE. DENMARK
Tlf: +45 4615 5210
Email: info@jefa.com www.jefa.com

Product Name: Replacement Rudder		Filename: Bavaria 36 V36 W. RUD33	
Drawing no.: RUD33		Sheet: 1 of 1	Proj. method:
Material: Alu6082	Scale: 1:10	Format: A4	CAD-System: SolidWorks
Creation Date: 04-05-2020	Dimensions are given in mm. Dimensions without tolerances according to DS/ISO 2768-m.		
Author: TML	This drawing belongs to Jefa Marine A/S and may not be used or shown without permission.		