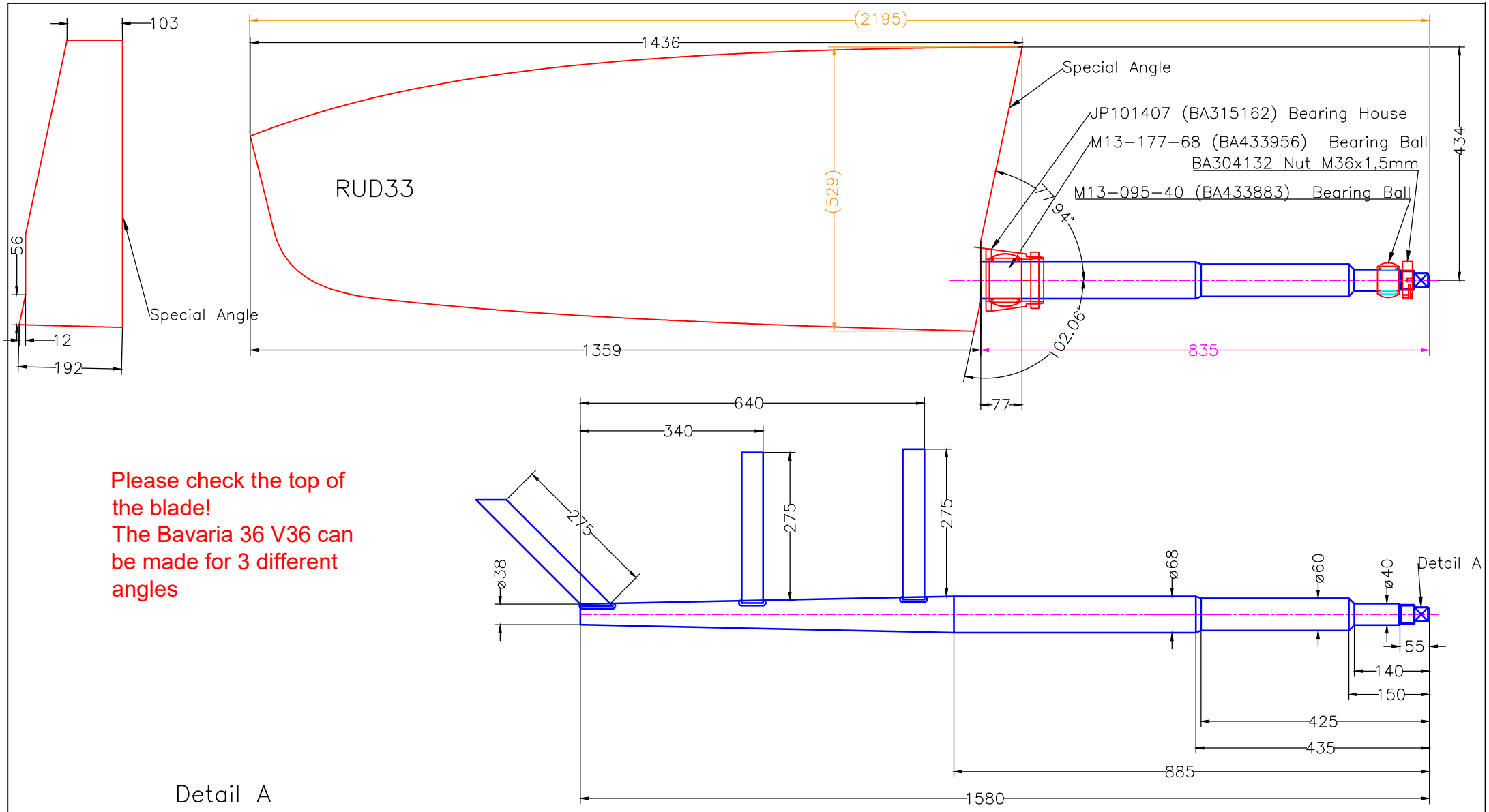

Please check the top of the blade!
The Bavaria 36 V36 can be made for 3 different angles

Detail A

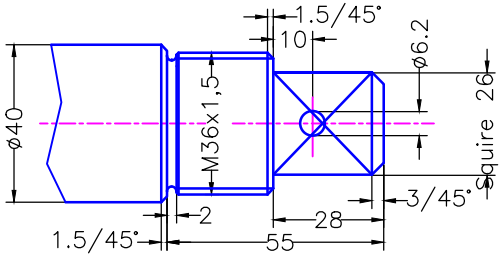

RUD33

Bavaria 36-Buildno. DE-BAVV36X4F505

Modify date: 07-09-2017 / TCH Inlay change to have a little angle	Project:	Bavaria 36, type V36 2002-05 RUD33 with 68mm stock	
Modify date: 13-12-2017 /EZ changed the rudder name into RUD33			
Modify date	Scale	1:10	Date 29.01.2015
Modify date	Material	ALU6082	Drawing no. BA36-V36
Modify date	Filename (dwg)		
Modify date	Drawn by	jr	

Jefa Rudder SYSTEMS
JEFA MARINE A/S
NIMBUSVEJ 2
2670 GREVE, DENMARK
Tlf.+45-4615 5210 & Fax +45-4615 5208
E-mail info@jefa.com & WWW.jefa.com