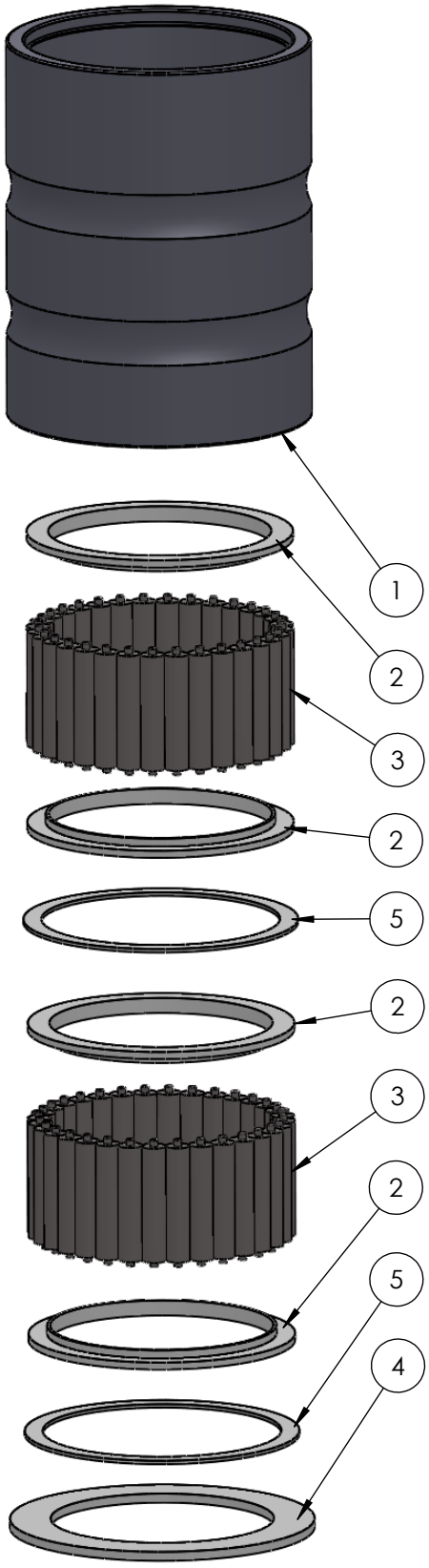

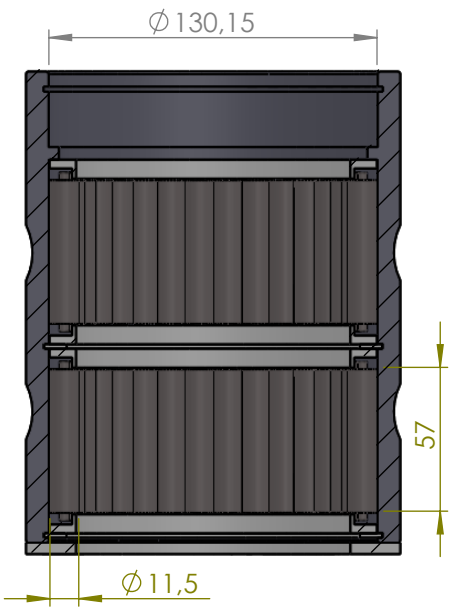

SECTION A-A

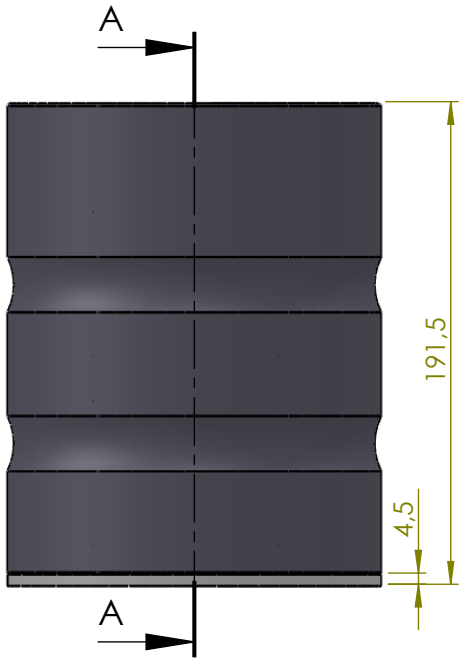

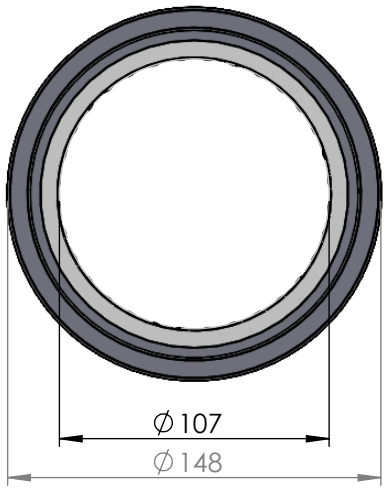

ITEM NO.	PART NUMBER	PART NAME	EXPL /QTY
1	M21-117	Rollerbearing ø105 - ø114mm	1
2	M05-263	L-ring ø108 ø111.5 ø130	4
3	M01-356	Roller ø11.5 x 57mm	64
4	M07-194	Washer ø108.5 ø148	1
5	M03-270	Delrin Lockring ø133,5 x ø116 x 1,75mm	2

DWG NR / NAME: **41107 / Lower roller bearing**

BATCH NR:

PROJECT: Shaft Ø107mm, max working load 14000kg

REKV.NR / ORDRE NR:

DATE:	NAME:	SCALE / PAPER:	MATERIAL:	LOCATION:	ORDRE DATO:
23-06-2009	JR	1:3 / A4	WEIGHT: g		

MODIFY DATE: : /

REV:

LEV.DATO:

Jefa Rudder SYSTEMS
JEFA MARINE A/S
NIMBUSVEJ 2
2670 GREVE. DENMARK
Tlf: +45 4615 5210 & Fax: +45 46155208
Email: info@jefa.com www.jefa.com